Straight Blade Devices

# 15A, 125V, 2 Pole, 3 Wire Grounding Hubbell-Pro™ Heavy Duty Duplex Receptacles

HUBBELL

## Features

- Slender/compact design
- Finder Groove Face
- Triple wipe contacts

## Ordering Information

| Description | Device Color | UPC | Catalog Number |
|---|---|---|---|
| Back and side wired | White | 783585834979 | 5262W |

## Listings

UL Listed to UL498 File No. E2186
Certified to CSA 22.2, No. 42
Fed. Spec. W-C-596
NEMA® WD-6 Compliant

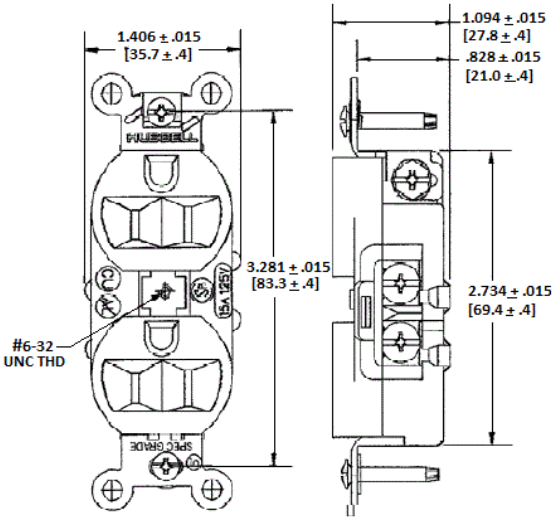


## Specifications

| | |
|---|---|
| Material | Thermoplastic/Composite |
| Contacts | Brass |
| Mounting Strap | Galvanized steel |
| Automatic Self-grounding Staple | Stainless steel |
| Mounting Screws | Zinc plated steel |

## Performance

**Electrical**

| | |
|---|---|
| Current Interrupting | Certified for current interrupting at full rated current |
| Dielectric Voltage | Withstands 2,000V minimum |

**Mechanical**

| | |
|---|---|
| Product Identification | Ratings are a permanent part of the device |
| Terminal Accommodation | #14-#10 AWG copper stranded or solid conductor only |
| Terminal Identification | Terminal wire leads identified in accordance with UL 498 |

**Environmental**

| | |
|---|---|
| Flammability | UL 94 V-2 |
| Operating Temperatures | Maximum continuous 75°C; minimum -40°C (w/o impact) |

## Accessories

Wallplate or Weatherproof Cover Duplex Opening

## Resources

Customer Use Drawing
eCatalog

Dimensions in Inches (mm)

Hubbell Wiring Device-Kellems • Hubbell Incorporated (Delaware) • 40 Waterview Drive • Shelton, CT 06484
Phone (800) 288-6000 • Fax (800) 255-1031 • Specifications subject to change without notice.

HUBBELL®
Wiring Device-Kellems