TRA-3FH

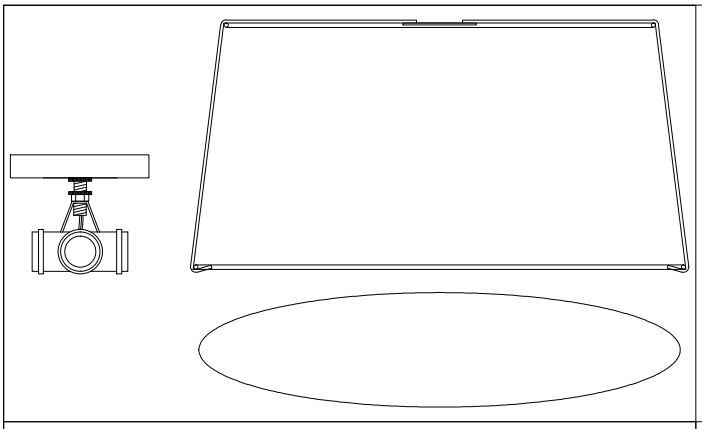

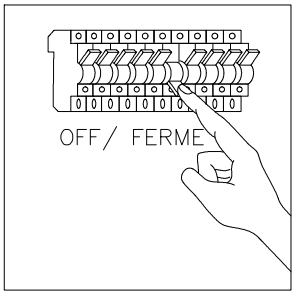

1

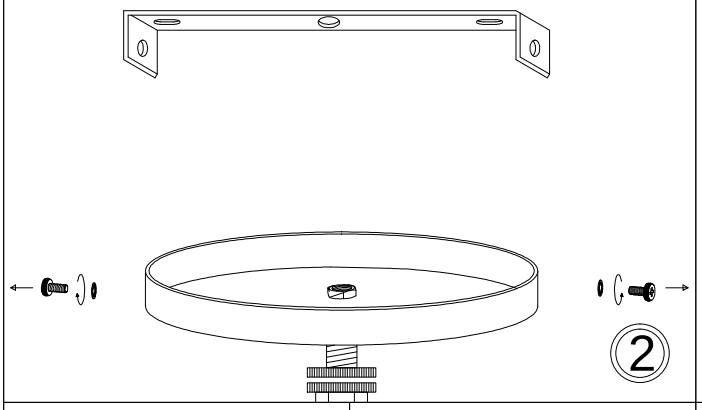

2

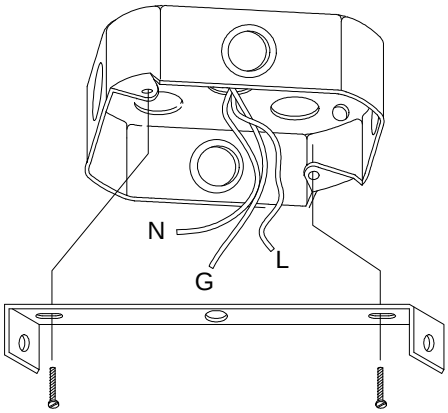

3

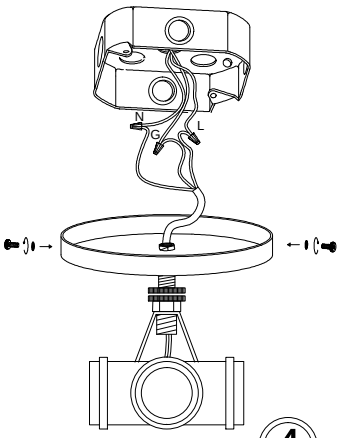

4

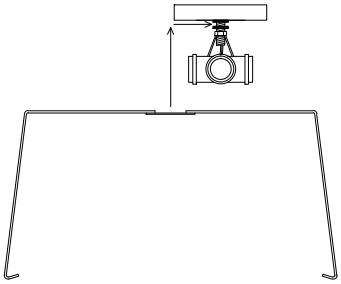

5

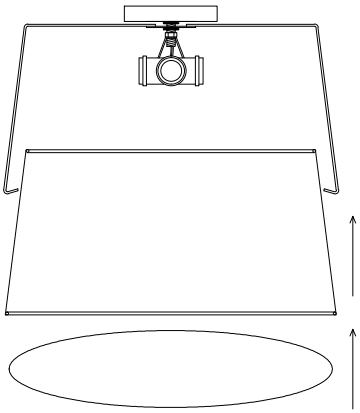

7

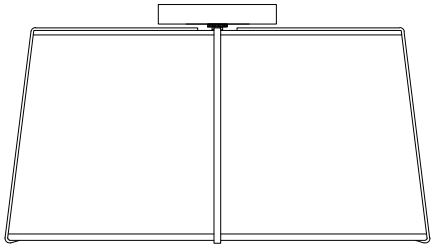

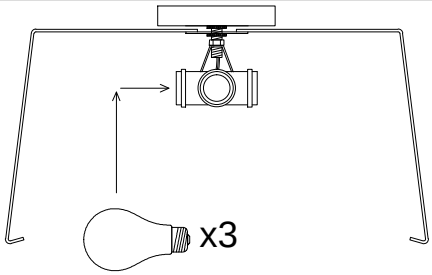

6

Bulbs/ Ampoules:
3x Max 40W E26 Base
(Not Incuded/ Non Inclus)

1401 Courtney Park Drive East, Mississauga, Ontario, Canada L5T 2E4
Tel: (905) 564-1262 Fax: (905) 564-1299 Email: dainolite@dainolite.ca Web: www.dainolite.ca

08/2019